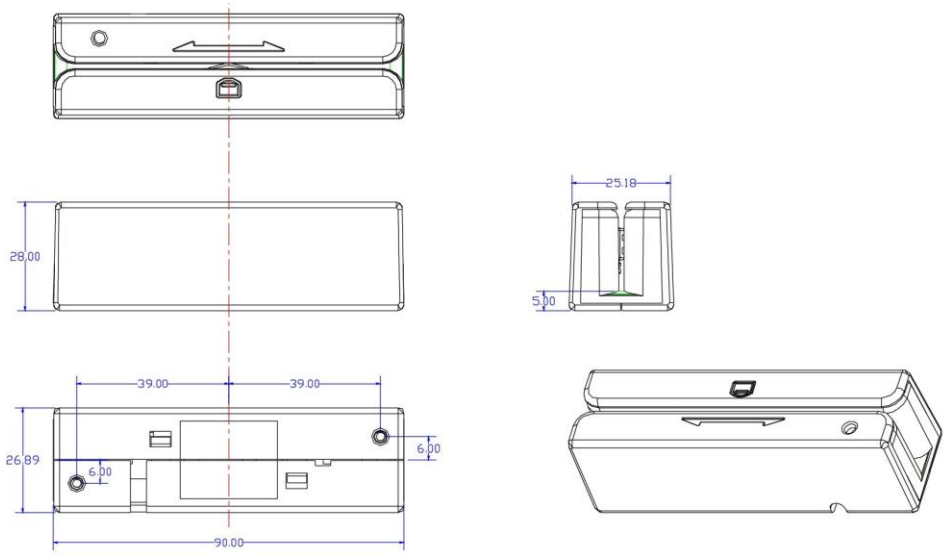
25.18
28.00
5.00
39.00
39.00
26.89
6.00
6.00
90.00